EFAFLEX

Technical product description

High-speed spiral door

Machine protection

EN

GEA AUTOMATION

Table of contents

1 **Short description** 4

2 **Technical properties** 6

3 **Construction of the high-speed spiral door machine protection** 9

4 **Door safety** 19

5 **Equipment** 21

1 Short description

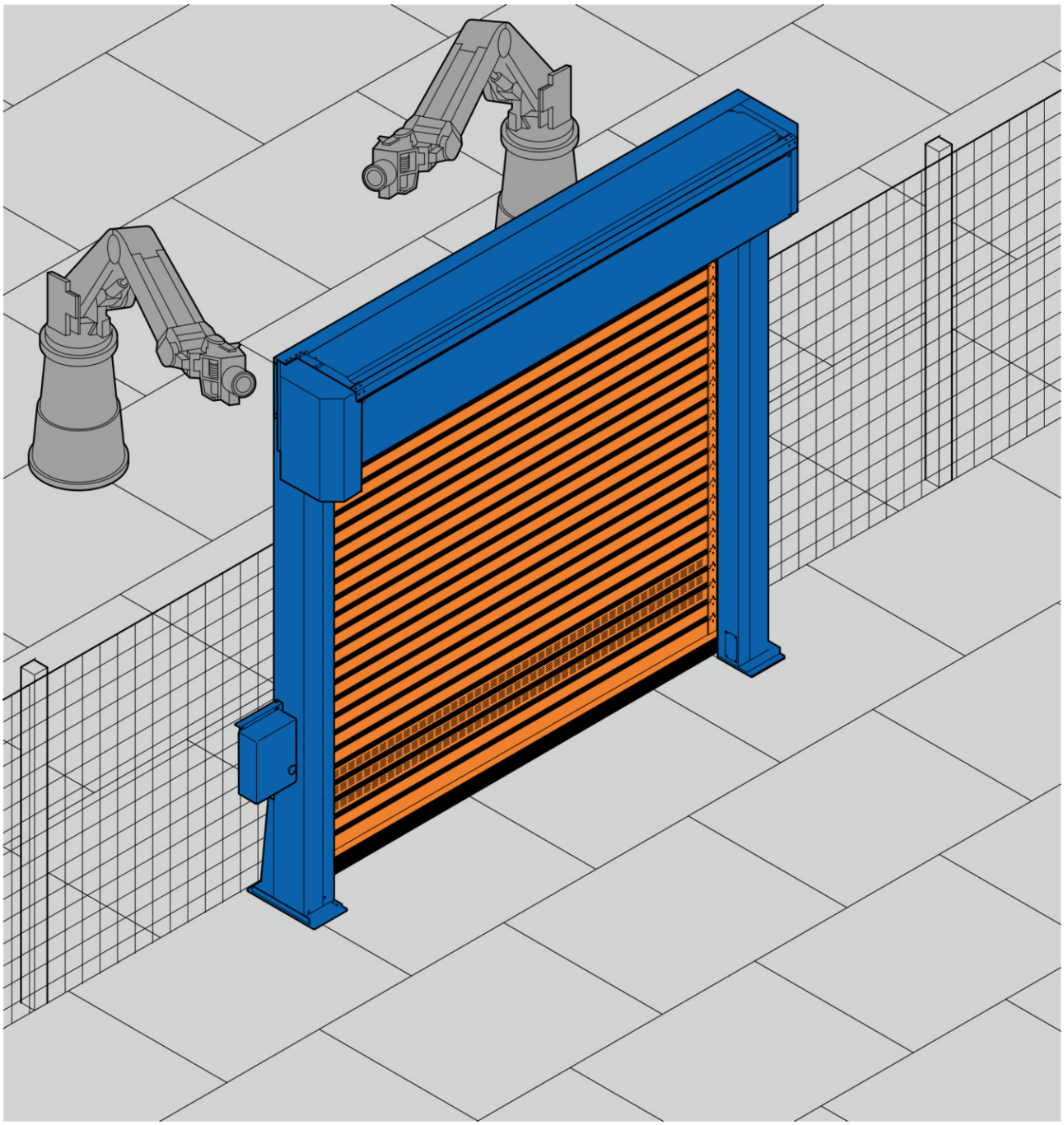

Fig. 1: EFA-SST® MS high-speed spiral door

The EFA-SST® MS high-speed spiral door is a functionally reliable, space-saving and low-maintenance machine protection door which has been specially engineered for industrial use.

The EFA-SST® MS high-speed spiral door is a safety component with EC type examination certification as per Machinery Directive 2006/42/EC and a certified performance Level "d" for safety-related functions as per DIN EN ISO 13849.

It is a standalone powered segregating safety device with locking mechanism as per DIN EN 953 which, in conjunction with the control system of the machine, provides the highest level of safety for personnel and plants and machines in the industrial and commercial sector.

The side frames have integrated floor supports and are thus self-supporting. This means that the EFA-SST® MS high-speed spiral door can be set up freestanding. The side frames and the covers for the spiral box and the drive are made of galvanised sheet steel.

The basic construction is based on tried and tested EFAFLEX spiral door technology. The side frames, made of galvanised sheet steel, have a integrated floor fastening and are thus self-supporting. The durable door leaf on the EFA-SST® MS high-speed spiral door is made of fixed, anodised, double-walled aluminium slats. Single-wall, transparent viewing slats made of shock-resistant polycarbonate can also be used to enable the machine area to be viewed.

The high-performance frequency converter controller in conjunction with the functionally adapted drive makes for particularly dynamic door running. The locking mechanism for monitoring the secure closed position allows the machine to be integrated into the machine (cat. 4 / PL as per DIN EN ISO 13849-1).

The EFA-SST® MS high-speed spiral door thus meets all requirements fore a secure and modern "machine protection door" with a high cycle rate and can be used in almost all production processes.

2 Technical properties

Use

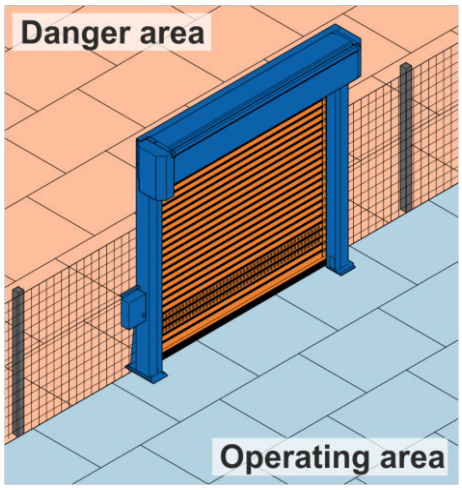

Fig. 2: Use

	Danger area
	Operating area

Use

- Segregating safety device (with optional safety limit switch as a locking mechanism)

Area of application

- Industrial applications
- Plants and machines
- Welding booths

Temperature range for use

- +5 °C to +50 °C

Dimensions

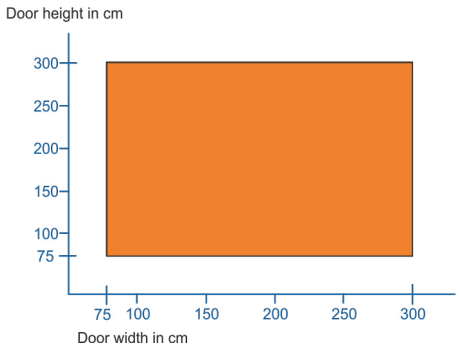

Fig. 3: Diagram of possible door heights and door widths

Data	Value	Unit
Door width	750–3000	mm
Door height	750–3000	mm

Speeds

Data	Value	Unit
Cycles per minute	7	
Opening speed (max.)	approximately 2.2 (2.7)	m/s
Closing speed	approx. 0.6	m/s

Performance properties

Data	Value
Air permeability as per DIN EN 12426	Class 0
Resistance to wind load as per DIN EN 12424	Class 4
Airborne sound insulation as per EN ISO 717-1	23 dB

Fire performance as per DIN 4102

Data	Value
Material class	B2 normally inflammable

Applied safety standards

The following standards were applied for planning, engineering and production:

DIN EN 13241-1	Doors – Product standard
DIN EN 12453	Doors – Safety in use of power operated doors – Requirements
DIN EN 12445	Doors – Safety in use of power operated doors – Test methods
DIN EN 12604	Doors – Mechanical aspects – Requirements
DIN EN 12605	Doors – Mechanical aspects – Test methods
DIN EN 12978	Doors and gates – Safety devices for power operated doors and gates – Requirements and test methods
DIN EN 13849	Safety of machinery – Safety-related parts of control systems
DIN EN 953	Safety of machinery – Guards – General requirements for design and constructions of fixed and movable guards
DIN EN 1088	Safety of machinery – Interlocking devices with associated guards – Principle for design and selection
DIN EN 60204-1	Safety of machinery – Electrical equipment of machines
2004/108/EC	DIRECTIVE 2004/108/EC OF THE EUROPEAN PARLIAMENT AND COUNCIL from 15th December 2004 for alignment of the legal requirements of member states for electromagnet compatibility and withdrawal of Directive 89/336/EEC
2006/42/EC	DIRECTIVE 2006/42/EC OF THE EUROPEAN PARLIAMENT AND COUNCIL from 17th May 2006 on machines and for amendment of Directive 95/16/EC (new release)
2006/95/EC	DIRECTIVE 2006/95/EC OF THE EUROPEAN PARLIAMENT AND COUNCIL from 12th December 2006 for alignment of the legal requirements of member states regarding electrical equipment for use within certain voltage limits
DIN EN ISO 12100	Safety of machinery – General design principles – Risk assessment and risk reduction

Technical properties

Basic construction performance

Data	Value
Loadings per year	250 000
Service life	12 years

Control unit

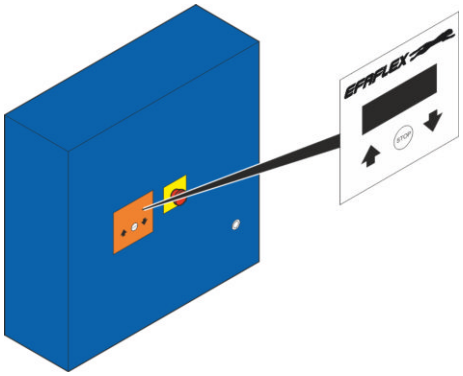

Fig. 18: Control unit

Control unit	FU3E
Size	300x400x120 mm
Protection type	IP54
Functional elements accessible from the outside	Viewing window for displaying status and fault messages Membrane keypad for parametrising the door system/master switch
Master switch	on the control unit cover
Supply voltage	400 V AC +/- 10 %
Frequency	50–60 Hz
Supply cable	Fuse protection of 16 A to be provided by the user (K characteristic)
With residual-current circuit breaker (RCCD) as necessary	300 mA as per DIN VDE 0100-530 (AC/DC sensitive)
Positioning of the control unit	on the motor-side side frame

4 Door safety

The main closing edge is secured by a combination of a safety strip and a light barrier (C device plus D device). This achieves the minimum protection level as per EN 12453.

In addition the owner and the manufacturer have to consult with each other in order to provide a safeguard for the approach area. This will be based on the owner's risk assessment.

Safety edge and light barrier

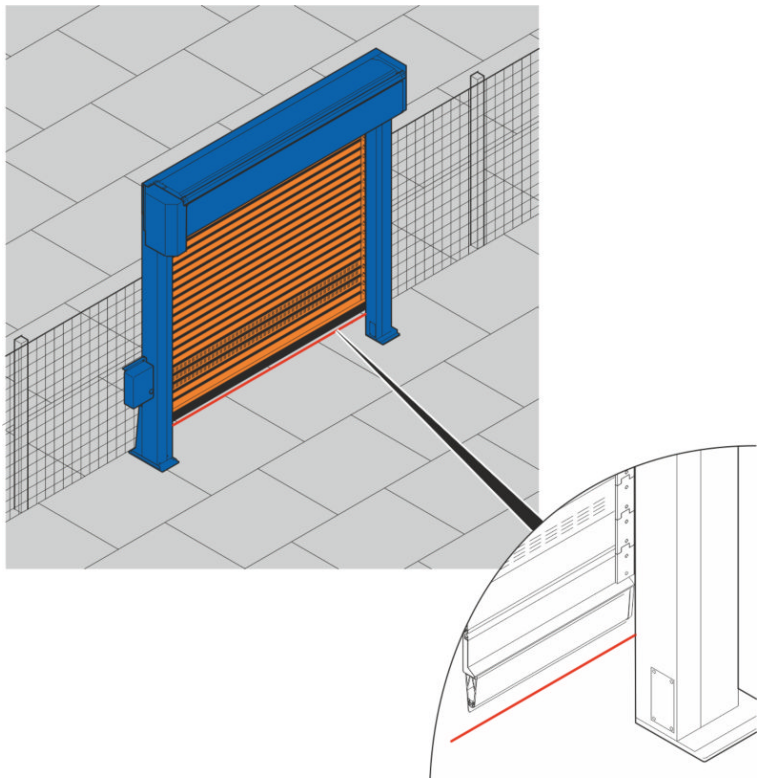

Fig. 19: Safety edge and light barrier

Closing edge - safeguard	Closing edge with sensor equipment and signal transfer via energy chain.

If the safety edge comes into contact with an obstruction during the closing procedure, the system stops, opens completely and closes automatically again once the "keep-open" time has elapsed.

Light barrier (optional)	Light barriers (IP67) installed in the door side frame, max. 1

The light barriers which are installed in the side frames at the sides are positioned directly at the door closing level. The height of the light barriers is variable.

Locking mechanism for powered segregating safety equipment

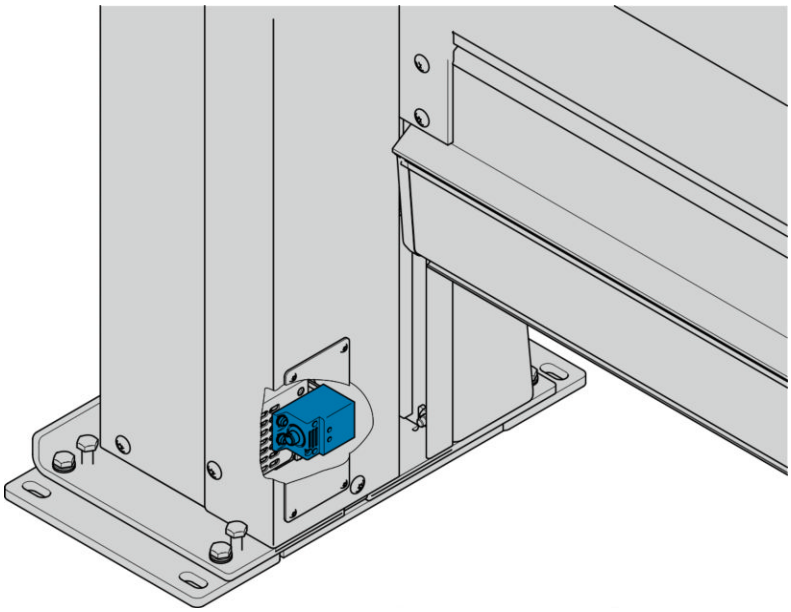

Fig. 20: Locking mechanism

The locking mechanism for monitoring the secure closed position allows the machine to be integrated into the plant/machine control system and is a cat. 4 / PL as per DIN EN ISO 13849-1 design. A servicing cover makes for easy access.

5 Equipment

Standard equipment

- Basic door construction, galvanised (275 g/m²)
- Round spiral door leaf guide
- Aluminium slat, 105 mm x 20 mm
- FU3E control unit
- Safety edge
- Locking mechanism (safety limit switch)

Optional equipment (special equipment subject to surcharge)

- Basic door construction, galvanised (275 g/m²), with powder-coated finish as per RAL
- Viewing slat with SAN glass, 105 mm x 20 mm
- Viewing slat with polycarbonate glass (scratch resistant surface), 105 mm x 20 mm
- Ventilation slat, 105 mm x 20 mm
- Door leaf slats with powder coated finish with RAL colour
- 1 safety light barrier, 300 mm from the floor
- Command devices: Push-buttons, pull switches, key switches etc.
- Command devices/safety: Radar detector, EFA-SCAN®, IR (infrared presence sensor)
- Bottom and front cover of the spiral box
- Top cover of the spiral box
- Locking mechanism (safety limit switch)
- Emergency release (lockable)
- Floor support

Special constructions

Special constructions/special orders are design types which are not covered, either mechanically or electrically or in terms of materials or colours, by standard versions in the sales price lists or by a design from the technology variants table. Special enquiries have to be made for these designs which will also be subject to surcharges and longer delivery times in accordance with expenditure.

EFAFLEX

safe high-speed doors

EFAFLEX Tor- und Sicherheitssysteme
GmbH & Co. KG
Fliederstraße 14
84079 Bruckberg
GERMANY
Telephone: +49 (0) 8765 82-0
Fax: +49 (0) 8765 82-200
email: info@efaflex.com
Internet: www.efaflex.com